PATRIZIAGARGANTI

Firenze

BESPOKE LIGHTING DESIGN

Bespoke Lighting Design 01

art. EC07 - Eccentrica Collection

8 lights Wall lamp

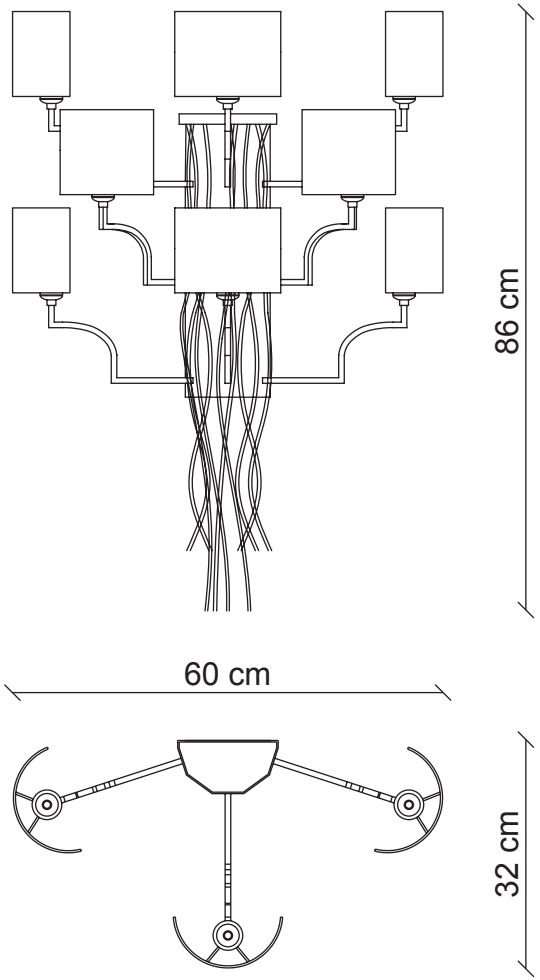

Metals



Fabrics



Chains



Available only for:
Eccentrica - Preziosa - Estrosa

Accessories: WHITE NICKEL - BLACK NICKEL - GOLD



Ø 15
H. 12

8x
60W E14
not supplied

m^3 0,17

Kg 5,5