moooi©



Canvas Sofa

Enjoy the comforts of a cozy lounge & sofa that make you feel like an expert art lover sitting on a canvas of hazy dreams.

Designer	Marcel Wanders
Year of design	2012
Material	Steel box frame covered in foam and dacron

technical

The Canvas sofa is constructed from a steel box frame covered in foam and dacron, the seat cushion is made of cut foam. A set of 3 back cushions is separately available, as well as 2 different sets of decorative pillows.

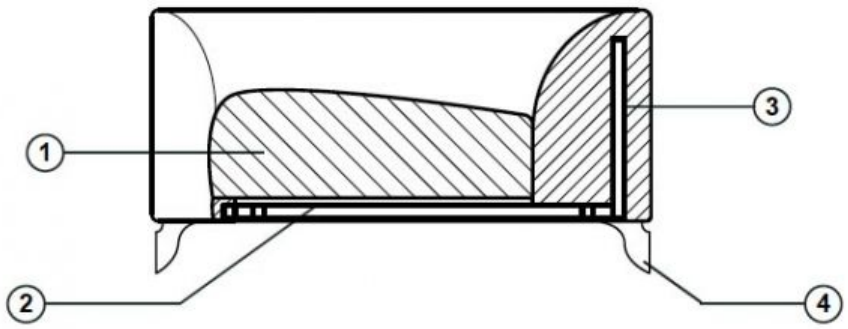

1. Multiple densities of cut foam + dacron
2. Steel springs attached to the wood base
3. Wooden box frame covered
4. Chromed steel legs

upholstery categories

Arredo	Jacquard Andaz
Leather*	Jacquard Fresco
Cervino	Jacquard Old
Leather*	Black & Old Blue
Abbracci*	
Softlinen	

**not removable*

dimensions

Canvas Sofa 260cm | 102.4"

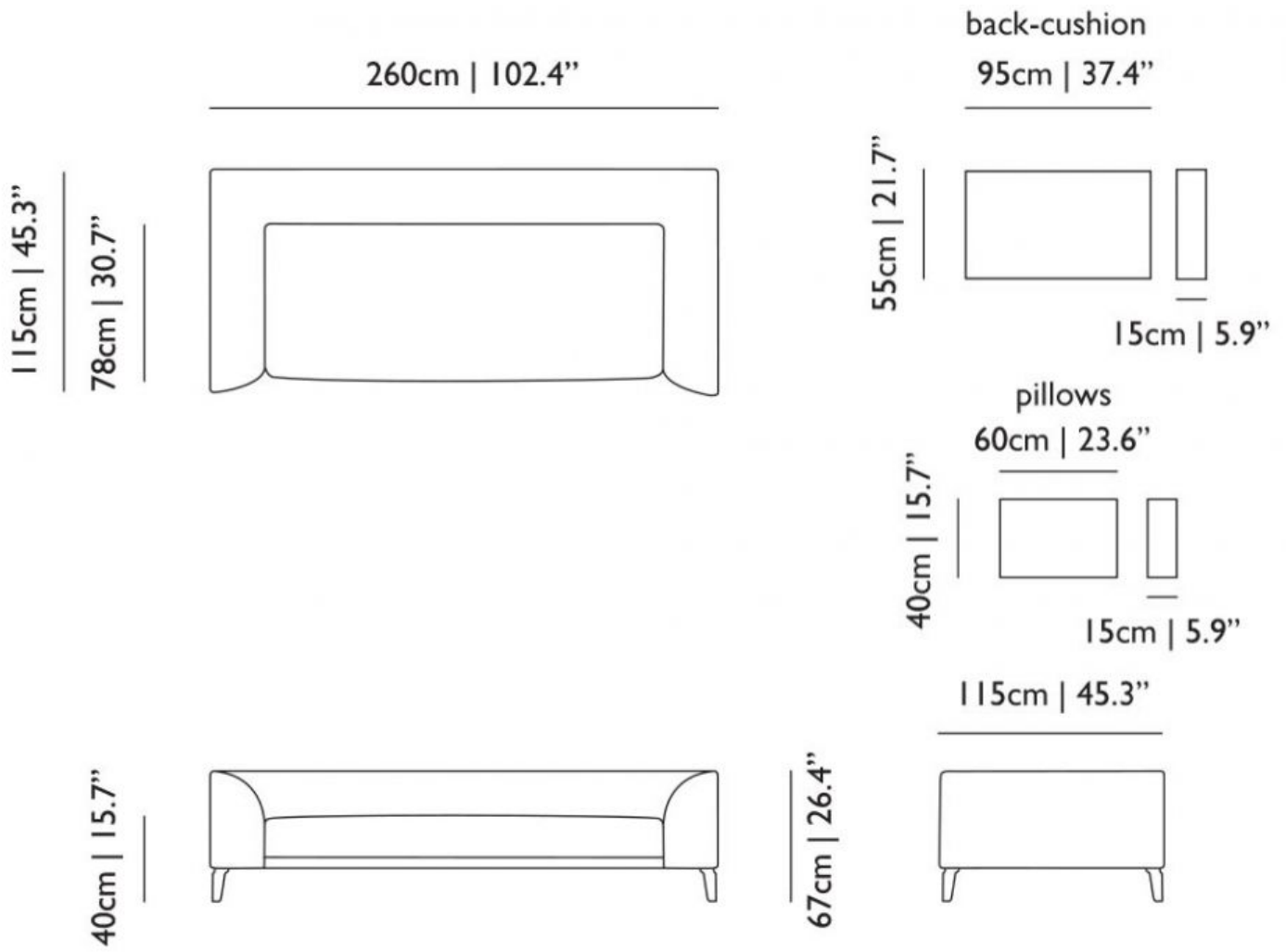

Canvas Sofa 230cm | 90.6"

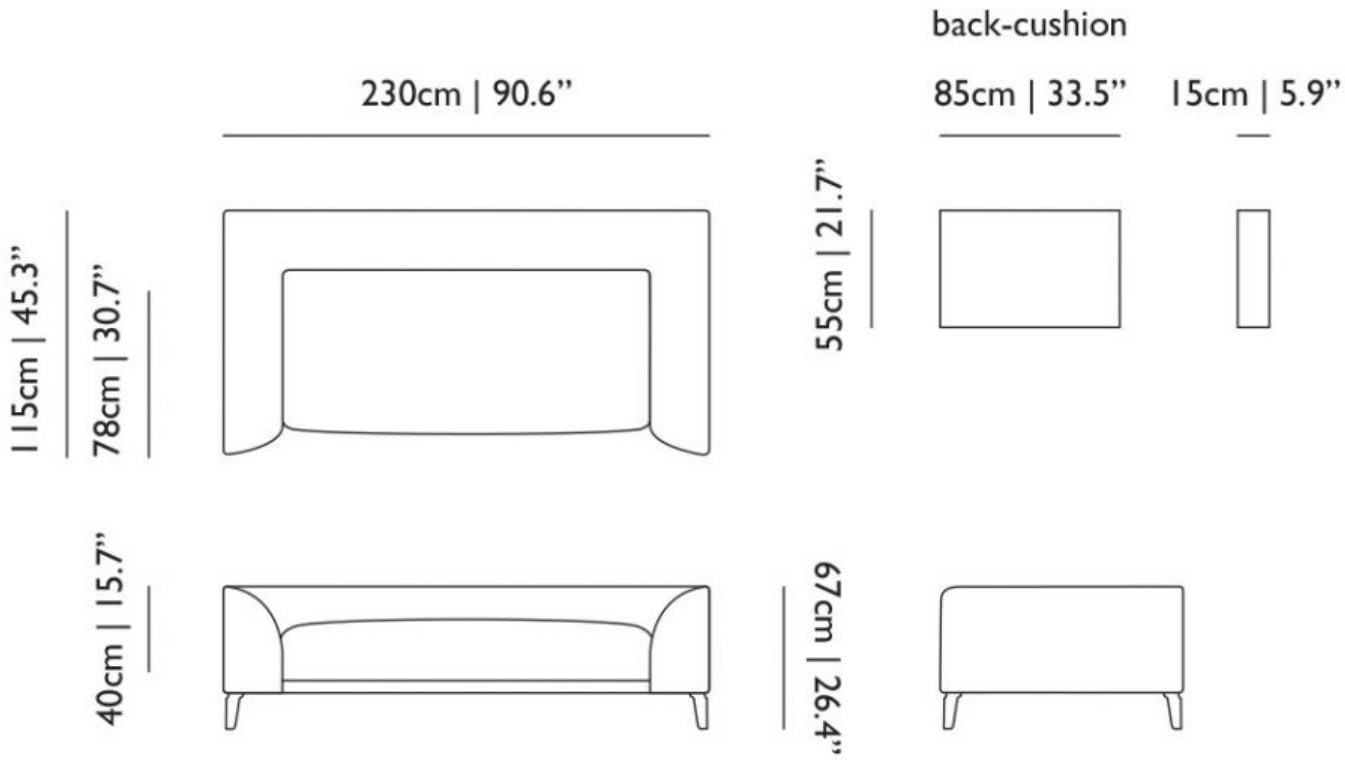

Canvas Footstool

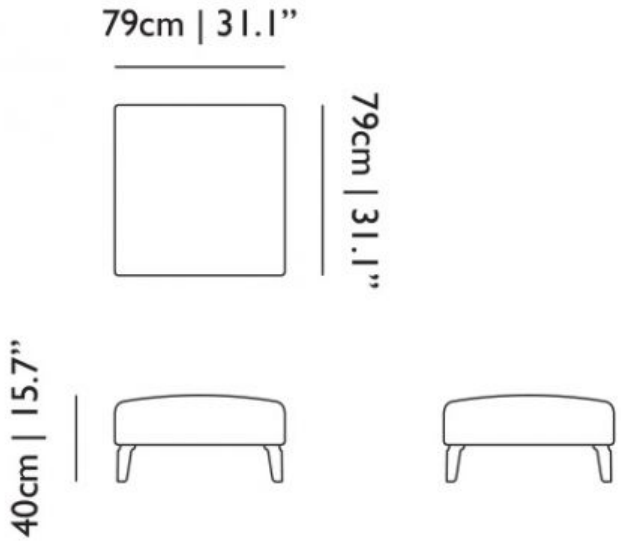

Abbracci

composition
100% pl

abrasion
50.000 martindale

lightfastness 4

firetest
FR BS5852 0/1
EN1021 1&2



Abbracci
Black

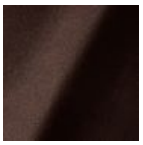

Abbracci
Brown



Abbracci
Grey



Abbracci
Oyster



Abbracci
Taupe

Jacquard andaz

composition:
34% cotton - 30% viscose - 24% linen - 12% polyamide

abrasion:
25000 martindale

lightfastness 4-5

firetest:
BS EN 1021 1&2



Jacquard
Andaz

moooi

Jaquard Fresco

composition
40% vi ,36% co,14% pl, 10% li

abrasion
20.000> martindale

lightfastness 4-5

firetest
EN1021 1&2



Jaquard
Fresco

Jacquard Old Black & Blue

composition
52% vi, 38% co, 10% li

abrasion
20.000> martindale

lightfastness 4-5

firetest
EN1021 1&2



Jacquard
Old Blue



Jacquard
Old Black

Liscio

composition
35% WO / 35% CV / 21% CO/ 9% PA

abrasion
30.000 Martindale

lightfastness
4-6

firetest
US. Cal. Bull. 117-2013
Upon request, with treatment:
BS5852 part1


Liscio
Grigio Blu Scuro


Liscio
Grigio Blu


Liscio
Grigio Scuro


Liscio
Muscio Scuro


Liscio
Muscio


Liscio
Argento


Liscio
Nebbia


Liscio
Pietra


Liscio
Perla


Liscio
Latte Scuro


Liscio
Latte

Softlinen

composition
100% Linen

abrasion
25.000 martindale

lightfastness 6

firetest
FR BS5852 0/1
EN1021 1&2


Softlinen
Beige


Softlinen
Brown

Justo

composition
15% CO, 35% PC, 10% PL, 40% VI

abrasion
50.000 Martindale rubs, EN ISO 12947

lightfastness
Note 5, EN ISO 105-B02

fire test
EN 1021-1/2
US. Cal. Bull. 117-2013
NFPA 260
Upon request, with treatment:
BS5852 part1
BS5852 crib5


Justo **Alge**


Justo **Bazalt**


Justo **Bred**


Justo **Flod**


Justo **Hinde**


Justo **Lyse**


Justo **Muse**


Justo **Nat**


Justo **Sennep**


Justo **Sten**

Vesper

composition
10% CO, 40% L, 10% PA, 10% PL, 30% VI

abrasion
40.000 Martindale rubs, EN ISO 12947

lightfastness
Note 5, EN ISO 105-B02

firetest
EN 1021-1/2
US. Cal. Bull. 117-2013
Upon request, with treatment:
BS5852 part1
BS5852 crib5


Vesper
Aluminium


Vesper
Brass


Vesper
Bronze


Vesper
Carbon


Vesper
Nickel


Vesper
Silver


Vesper
Steel


Vesper
Titan

moooi

Trickle

composition
60% WO / 20% PES / 20% PA

abrasion
80.000 martindale

lightfastness 6

firetest
EN1021-1/2
US. Cal. Bull. 117-2013
BS5852 part1
DIN 4102-B2


Trickle **Flour**


Trickle **Twig**


Trickle **Peat**


Trickle **Dust**


Trickle Slate


Trickle **Chili**


Trickle **Lavender**


Trickle **Lagoon**

Twill

composition
72% wo, 8% pa, 20% pl

abrasion
75.000 martindale

lightfastness 5

firetest
EN1021 1&2


Twill **Caviar**


Twill **Graphite**


Twill **Grass**


Twill **Grey**


Twill **Linen**


Twill **Natural**


Twill **Passion**


Twill **Walnut**

Twill Melange

composition
60% WO / 20% PES / 20% PA

abrasion
80.000 martindale

lightfastness 6-7

firetest
EN1021-1/2
US. Cal. Bull. 117-2013
BS5852 part1
DIN 4102-B2

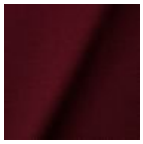
Twill Melange **Chili**


Twill Melange **Dust**


Twill Melange **Flour**


Twill Melange **Lagoon**


Twill Melange **Lavender**


Twill Melange **Peat**


Twill Melange **Slate**


Twill Melange **Twig**

Kvadrat Fabrics

Kvadrat Fabrics

Selected Moooi products can be upholstered with a collection of Kvadrat fabrics. Kvadrat designs high-quality upholstery, in an extensive range of colours and textures.

Go to our Kvadrat fabrics page for a full overview of all fabric families you can choose from.

packaging

Canvas Sofa:

H 122 cm | 48”
W 265 cm | 11.1”
D 73 cm | 28.7”

Colli 1

With packaging:
98,5 KG | 217 lb

Canvas Sofa 230:

H 235 cm | 92,5"
W 58 cm | 22,8"
D 121 cm | 47,6"

Colli 1/1

Set of 3 cushions:

H 57 cm | 22.4”
W 94 cm | 37”
D 52 cm | 20.5”

Colli 1

With packaging:
11 KG | 24 lb

Set of 3 pillows:

H 35 cm | 13.8”
W 60 cm | 23.6”
D 35 cm | 13.8”

Colli 1

With packaging:
3,5 KG | 7.7 lb

pillows - oil

Dimensions: 40cm x 60cm | 15.7" x 23.6"

front **back**



pillows - heritage

Dimensions: 40cm x 60cm | 15.7" x 23.6"

front **back**



Dodo Pavone

composition
12% CO 88% PL

abrasion
40.000 Martindale rubs, EN ISO 12947

lightfastness
Note 5, EN ISO 105-B02

firetest
US. Cal. Bull. 117-2013
Upon request, with treatment:
BS5852 part1



Bearded leopard Jacquard

composition
77% VI / 15% PES / 7% CO / 1% PA

abrasion
15.000 Martindale rubs, EN ISO 12947

lightfastness
Note 4-6, EN ISO 105-B02

firetest
EN1021-1/2
Upon request and with treatment:
BS5852 part1



Blushing Sloth Melange Mohair

composition
29% LANA / 24% LANA WM / 24% PES / 15% PA / 8% CO

abrasion
40.000 Martindale rubs, EN ISO 12947

lightfastness
Note 4-6, EN ISO 105-B02



Blushing Sloth Woolly Mohair

composition
85% WV / 15% WM

abrasion
15.000 Martindale rubs, EN ISO 12947

lightfastness
Note 4-6, EN ISO 105-B02

firetest
EN1021-1/2

BS5852 part1



Extinct
Animals
Fabric
Collection
Blushing Sloth
Woolly Mohair

Calligraphy Bird Jacquard

composition
64% VI, 21% PES, 15% CO

abrasion
50.000 Martindale rubs, EN ISO 12947

lightfastness
Note 4-6, EN ISO 105-B02

firetest
Upon request, with treatment;
BS5852 part1



Extinct Animals
Fabric Collection
Calligraphy Bird
Jacquard

The Silent Bison Velvet

composition
100% CO

abrasion
30.000 Martindale rubs, EN ISO 12947

lightfastness
Note 4-6, EN ISO 105-B02



The Menagerie of Extinct Animals

composition
100% PES

abrasion
50.000 Martindale rubs, EN ISO 12947

lightfastness
Note 4-6, EN ISO 105-B02

firetest
EN1021-1/2
Upon request, with treatment;
BS5852 part1

Armoured Boar Crackle

composition
100% cow hide

Type of leather
Pure aniline, nubuck finish



Armoured Boar Hairy

composition
100% cow skin

lightfastness
>3, ISO 105-B02:2004

