

Bart Swivel

by Moooi Works | Bart Schilder

One of the members of the Bart Family collection couldn't quite sit still and developed a look around, comfortably and in style.

Designer	Moooi Works
Year of design	2014
Material	Wooden frame covered in foam and dacron, the seat cushion is made in foam.
Additional	Swivel your Bart armchair around & enjoy another point of view!

technical

The Bart Swivel is constructed from a wood frame covered in foam and dacron, the seat cushion is made in foam and removable.

Bart Swivel is produced with removable covers for the seat cushion and all pillows (please check per category).

cleaning instructions

Moooi recommends using a good furniture polish and a soft cloth. Apply generously in layers to the surface and use the cloth to shine. Do not use abraisive fabrics, gently remove tough stains with warm water and a trusted multi-surface cleaner.

packaging

H 63 cm | 24,8"
W 102 cm | 40,2"
D 104 cm | 40,9"

Colli 1/1
Product weight:

With packaging:
39 KG | 86 lb

dimensions

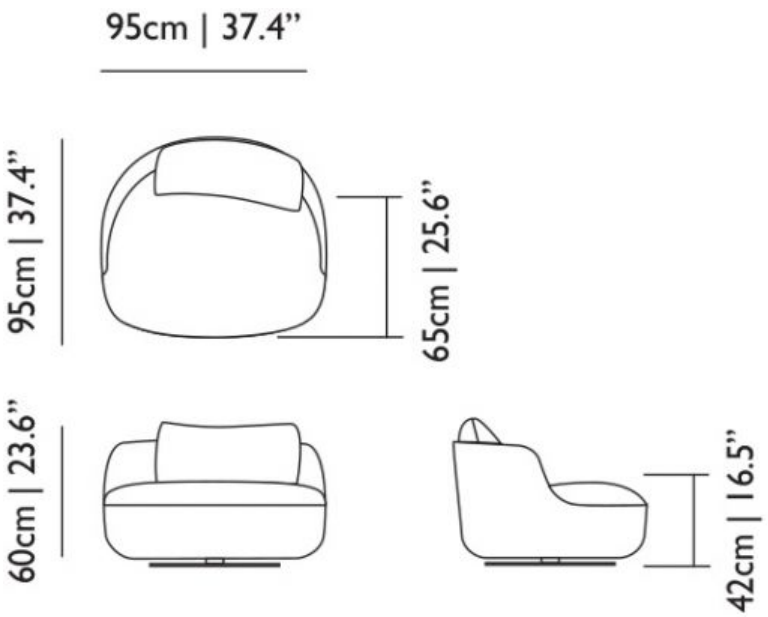

moooi

Abbracci

composition
100% pl

abrasion
50.000 martindale

lightfastness 4

firetest
FR BS5852 0/1
EN1021 1&2



Abbracci
Black

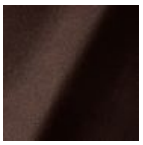

Abbracci
Brown



Abbracci
Grey



Abbracci
Oyster



Abbracci
Taupe

Justo

composition
15% CO, 35% PC, 10% PL, 40% VI

abrasion
50.000 Martindale rubs, EN ISO 12947

lightfastness
Note 5, EN ISO 105-B02

fire test
EN 1021-1/2
US. Cal. Bull. 117-2013
NFPA 260
Upon request, with treatment:
BS5852 part1
BS5852 crib5



Justo
Alge



Justo
Bazalt



Justo
Bred



Justo
Flod

moooi

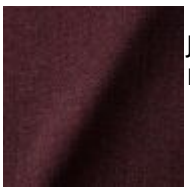
Justo
Hinde


Justo
Lyse


Justo
Muse


Justo
Nat


Justo
Sennep


Justo
Sten

Liscio

composition
35% WO / 35% CV / 21% CO/ 9% PA

abrasion
30.000 Martindale

lightfastness
4-6

firetest
US. Cal. Bull. 117-2013
Upon request, with treatment:
BS5852 part1


Liscio
Grigio Blu Scuro


Liscio
Grigio Blu


Liscio
Grigio Scuro


Liscio
Muscio Scuro


Liscio
Muscio


Liscio
Argento


Liscio
Nebbia


Liscio
Pietra


Liscio
Perla


Liscio
Latte Scuro


Liscio
Latte

Solis

composition
2% PA 3% PC 30% PL 65% WO

abrasion
40.000 Martindale rubs, EN ISO 12947

lightfastness
Note 5, EN ISO 105-B02

firetest
EN 1021-1/2
US. Cal. Bull. 117-2013
Upon request, with treatment:
BS5852 part1
BS5852 crib5


Solis
Crust


Solis
Dawn


Solis
Fog


Solis
Gray


Solis
Paper


Solis
Rain


Solis
Spencer


Solis
Suit


Solis
Sunset

Summit Melange

composition
20% WO / 5% PA / 15% PES
60% PES filling

abrasion
50.000 martindale

lightfastness 6

firetest
EN1021-1/2
US. Cal. Bull. 117-2013
BS5852 part1
DIN 4102-B2



Summit Melange
Flour



Summit Melange
Slate



Summit Melange
Dust



Summit Melange
Peat



Summit Melange
Twig



Summit Melange
Lagoon



Summit Melange
Lavender



Summit Melange
Chili

Summit UNI

composition
22% wo, 2% pa, 14% pl, 62% pl filling

abrasion
50.000 martindale

lightfastness 5

firetest
EN1021 1&2



Summit UNI
Caviar



Summit UNI
Graphite



Summit UNI
Grass



Summit UNI
Grey



Summit UNI
Linen



Summit UNI
Natural



Summit UNI
Passion



Summit UNI
Walnut

moooi

Trickle

composition
60% WO / 20% PES / 20% PA

abrasion
80.000 martindale

lightfastness 6

firetest
EN1021-1/2
US. Cal. Bull. 117-2013
BS5852 part1
DIN 4102-B2


Trickle **Flour**


Trickle **Twig**


Trickle **Peat**


Trickle **Dust**


Trickle Slate


Trickle **Chili**


Trickle **Lavender**


Trickle **Lagoon**

Twill

composition
72% wo, 8% pa, 20% pl

abrasion
75.000 martindale

lightfastness 5

firetest
EN1021 1&2


Twill **Caviar**


Twill **Graphite**


Twill **Grass**


Twill **Grey**


Twill **Linen**


Twill **Natural**


Twill **Passion**


Twill **Walnut**

Twill Melange

composition
60% WO / 20% PES / 20% PA

abrasion
80.000 martindale

lightfastness 6-7

firetest
EN1021-1/2
US. Cal. Bull. 117-2013
BS5852 part1
DIN 4102-B2

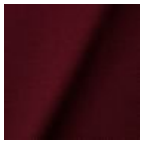
Twill Melange **Chili**


Twill Melange **Dust**


Twill Melange **Flour**


Twill Melange **Lagoon**


Twill Melange **Lavender**


Twill Melange **Peat**


Twill Melange **Slate**


Twill Melange **Twig**

Twill Summit Uni Composition

composition
Twill: 72% wo, 8% pa, 20% pl
Summit UNI: 22% wo, 2% pa, 14% pl, 62% pl filling

abrasion
Twill: 75.000 martindale
Summit Uni: 50.000 martindale

lightfastness 5

firetest
EN1021 1&2


Caviar


Graphite


Grass


Grey


Linen


Natural


Passion


Walnut

Velour

composition
77% wo, 8% pa, 15% pl

abrasion
100.000 martindale

lightfastness 7

firetest
FR BS5852 0/1
EN1021 1&2


Velour
Coral


Velour
Stone


Velour
Moss

Vesper

composition
10% CO, 40% L, 10% PA, 10% PL, 30% VI

abrasion
40.000 Martindale rubs, EN ISO 12947

lightfastness
Note 5, EN ISO 105-B02

firetest
EN 1021-1/2
US. Cal. Bull. 117-2013
Upon request, with treatment:
BS5852 part1
BS5852 crib5


Vesper
Aluminium


Vesper
Brass

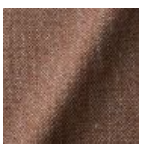
Vesper
Bronze


Vesper
Carbon


Vesper
Nickel


Vesper
Silver


Vesper
Steel


Vesper
Titan

Arredo Leather

composition
100% semi aniline leather
Leather is a natural product, colours may vary from hide to hide.

firetest
EN1021 1&2



Arredo Leather
Black



Arredo Leather
Brown

Arredo Leather
White

Cervino Leather

composition
100% aniline leather
Leather is a natural product, colours may vary from hide to hide.

firetest
EN1021 1&2



Cervino Leather
Anthracite



Cervino Leather
Cognac



Cervino Leather
Mud



Cervino Leather
Pure

Kvadrat Fabrics

Kvadrat Fabrics

Selected Moooi products can be upholstered with a collection of Kvadrat fabrics. Kvadrat designs high-quality upholstery, in an extensive range of colours and textures.

Go to our Kvadrat fabrics page for a full overview of all fabric families you can choose from.

Dodo Pavone

composition
12% CO 88% PL

abrasion
40.000 Martindale rubs, EN ISO 12947

lightfastness
Note 5, EN ISO 105-B02

firetest
US. Cal. Bull. 117-2013
Upon request, with treatment:
BS5852 part1



Bearded leopard Jacquard

composition
77% VI / 15% PES / 7% CO / 1% PA

abrasion
15.000 Martindale rubs, EN ISO 12947

lightfastness
Note 4-6, EN ISO 105-B02

firetest
EN1021-1/2
Upon request and with treatment:
BS5852 part1



Blushing Sloth Melange Mohair

composition
29% LANA / 24% LANA WM / 24% PES / 15% PA / 8% CO

abrasion
40.000 Martindale rubs, EN ISO 12947

lightfastness
Note 4-6, EN ISO 105-B02



Blushing Sloth Woolly Mohair

composition
85% WV / 15% WM

abrasion
15.000 Martindale rubs, EN ISO 12947

lightfastness
Note 4-6, EN ISO 105-B02

firetest
EN1021-1/2

BS5852 part1



Extinct
Animals
Fabric
Collection
Blushing Sloth
Woolly Mohair

Calligraphy Bird Jacquard

composition
64% VI, 21% PES, 15% CO

abrasion
50.000 Martindale rubs, EN ISO 12947

lightfastness
Note 4-6, EN ISO 105-B02

firetest
Upon request, with treatment;
BS5852 part1



Extinct Animals
Fabric Collection
Calligraphy Bird
Jacquard

The Silent Bison Velvet

composition
100% CO

abrasion
30.000 Martindale rubs, EN ISO 12947

lightfastness
Note 4-6, EN ISO 105-B02



moooi

Dwarf Rhino Crackle



Extinct Animals Fabric Collection
Dwarf Rhino Crackle

Armoured Boar Crackle

composition
100% cow hide

Type of leather
Pure aniline, nubuck finish



Armoured Boar Hairy

composition
100% cow skin

lightfastness
>3, ISO 105-B02:2004

