moooi



Amami Sofa

An elegant and comfortable sofa dressed in heart-warming velvet, softly floating on long sensuous fringes that decorate and enhance it, producing a fresh breeze of lightness all around the room: this is For You by Lorenza Bozzoli.

Designer	Lorenza Bozzoli
Year of design	2016
Material	Wood, HR foam
Additional	The 3 back cushions are included.

Fabric



Lario 54 Blue

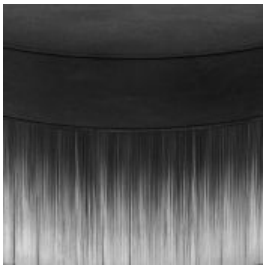

Lario 2002 Dark Grey

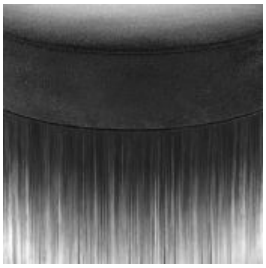

Lario 2003 Light Grey

Composition 100% COTTON
Martindale >40.000
Lightfastness 4
Pilling 5
Maintenance Spot staining with spray
detergent dry cleaning

dimensions

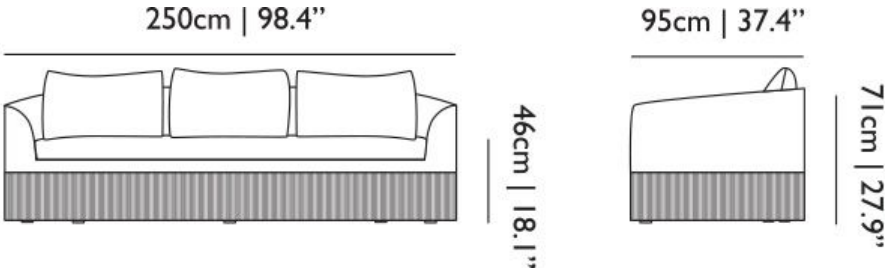

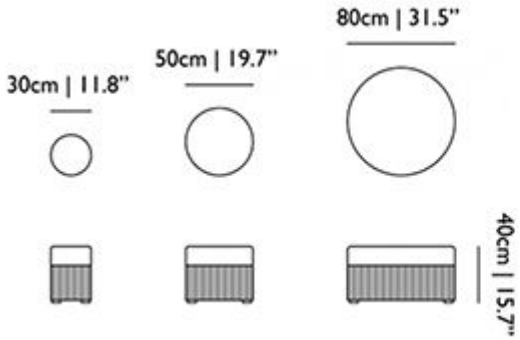
80cm | 31.5"
50cm | 19.7"
30cm | 11.8"
40cm | 15.7"

Packaging

Amami Sofa

H 83 | 32.7”
W 103 | 40.6”
D 253 | 99.6”

Amami Poof 80cm

H 49 | 19.3”
W 84 | 33.1”
D 84 | 33.1”

Amami Poof 50cm

H 49 | 19.3”
W 54 | 21.3”
D 54 | 21.3”

Amami Poof 30cm

H 49 | 19.3”
W 34 | 13.4"
D 34 | 13.4"