POLTRONA BD 21

"Maxima" Collection design Bartoli Design

Armchair with wooden frame, feather-padded seat and backrest, upholstered in leather or fabric.





Rovere tinto - Pelle / *Stained Oak - Leather*

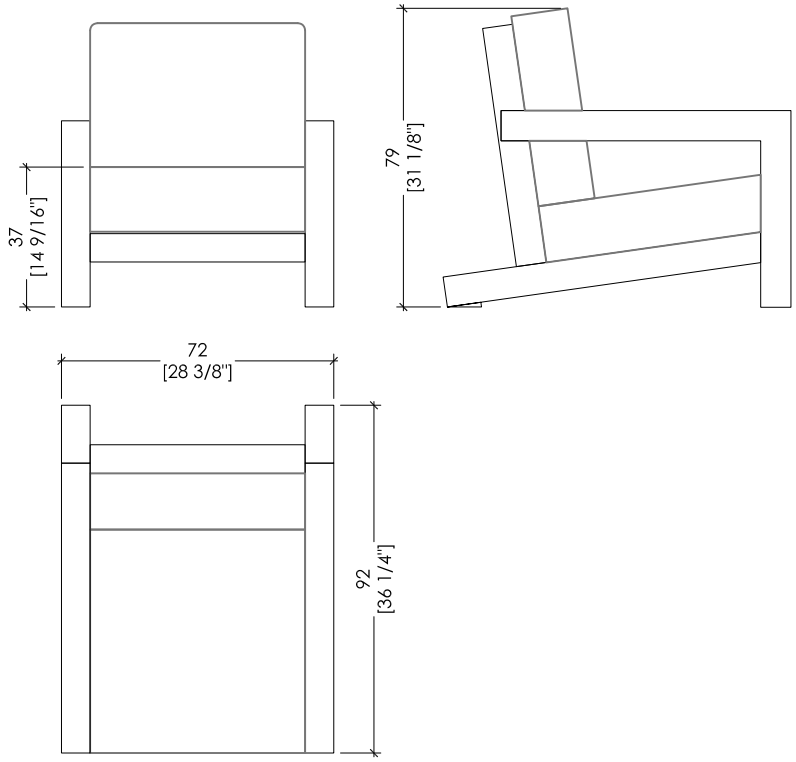

BEDIF
FEREN
TBEUN
IQUE

Disponibile in altre finiture e dimensioni / *Available in other finishes and sizes*

Laurameroni s.r.l. Via Manzoni 22040 Alzate Brianza (CO) - ITALY
Tel. +39 031 761450 Fax +39 031 763311
www.laurameroni.com info@laurameroni.com
Showroom Milan Via Durini 19 (3rd floor) Milan - ITALY Visits by appointment

Copyright © Laurameroni s.r.l. 2015 All rights reserved