CREDENZA BASSA ST 11 LZ

"Stars" Collection design Bartoli Design

Sideboard with four hinged doors, with two internal drawers, side panels, doors and base clad with metal. Inside lined and top clad in walnut wood. Available in: Polished steel, brass, copper and burnished copper.





Noce - Rame brunito / *Walnut - Burnished copper*

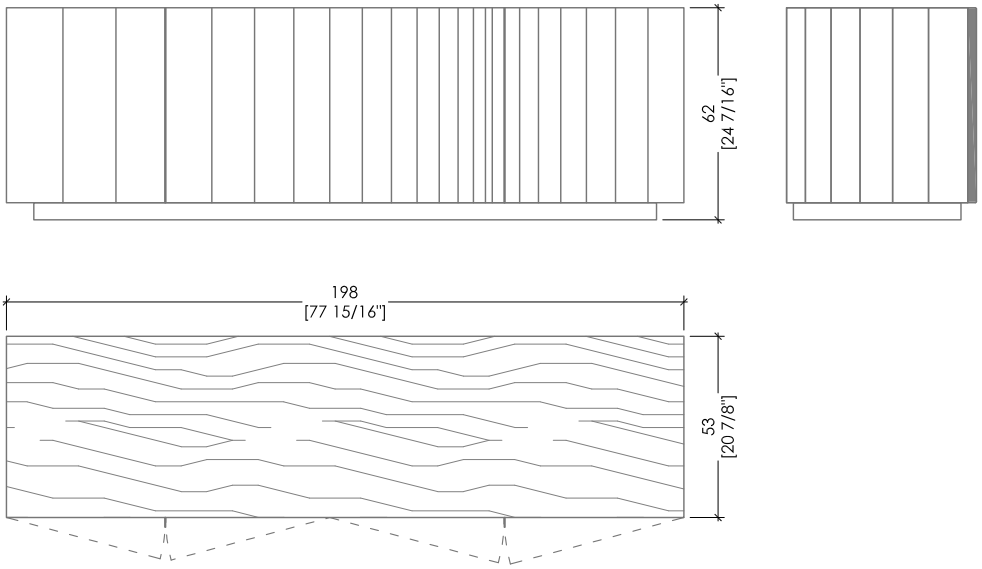

BEDIF
FEREN
TBEUN
IQUE

Disponibile in altre finiture e dimensioni / *Available in other finishes and sizes*

Laurameroni s.r.l. ▪ Via Manzoni 22040 Alzate Brianza (CO) - ITALY
Tel. +39 031 761450 ▪ Fax +39 031 763311
www.laurameroni.com ▪ info@laurameroni.com
Showroom Milan Via Durini 19 (3rd floor) Milan - ITALY ▪ Visits by appointment

Copyright © Laurameroni s.r.l. 2015 All rights reserved

CREDENZA BASSA ST 12 LG

"Stars" Collection design Bartoli Design

Sideboard with four hinged doors, with two internal drawers, side panels, doors and base clad with metal. Inside lined and top clad in walnut wood. Available in: Polished steel, brass, copper and burnished copper.





Noce - Acciaio lucido / *Walnut - Polished steel*

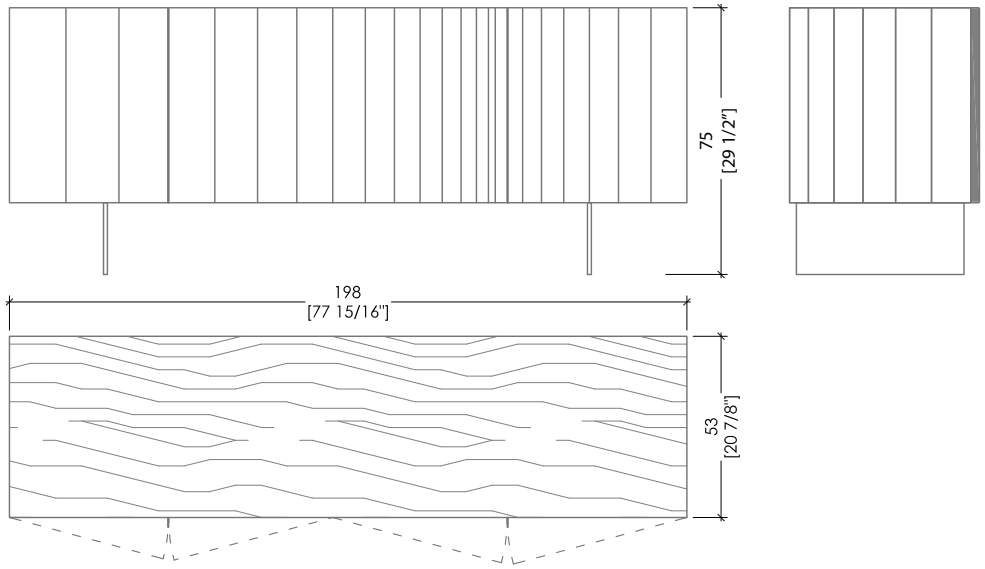

BEDIF
FEREN
TBEUN
IQUE

Disponibile in altre finiture e dimensioni / *Available in other finishes and sizes*

Laurameroni s.r.l. ▪ Via Manzoni 22040 Alzate Brianza (CO) - ITALY
Tel. +39 031 761450 ▪ Fax +39 031 763311
www.laurameroni.com ▪ info@laurameroni.com
Showroom Milan Via Durini 19 (3rd floor) Milan - ITALY ▪ Visits by appointment

Copyright © Laurameroni s.r.l. 2015 All rights reserved

LAURAMERONI
design collection

CREDENZA BASSA ST 11 LZ

"Stars" Collection design Bartoli Design



Ottone brunito / *Burnished brass*



Ottone satinato/ *Satin brass*



Rame brunito / *Burnished copper*



Rame satinato / *Satin copper*



Acciaio lucido / *Polished steel*



Ferro Cenere / *PCenere Iron*

BEDIF
FEREN
TBEUN
IQUE

Disponibile in altre finiture e dimensioni / *Available in other finishes and sizes*

Laurameroni s.r.l. ▪ Via Manzoni 22040 Alzate Brianza (CO) - ITALY
Tel. +39 031 761450 ▪ Fax +39 031 763311
www.laurameroni.com ▪ info@laurameroni.com
Showroom Milan Via Durini 19 (3rd floor) Milan - ITALY ▪ Visits by appointment

Copyright © Laurameroni s.r.l. 2015 All rights reserved